Photonics Industries
International, Inc.

SN Series Subnanosecond Lasers

www.photonix.com

Photonics Industries' SN Series sub-nanosecond lasers provide uniquely in market need for high pulse energies and specifiable low pulse widths (from 5 ns down to ~300 ps), within an all-in-one (AIO), compact form factor. Microprocessing applications as well as scientific applications, like LIDAR, can incorporate the aforementioned benefits with the high achievable repetition rates (up to 8 MHz) for optimal and versatile fulfillment of system requirements.

Applications	Features
• Cutting, drilling, welding, scribing, marking, intra-marking, patterning • High Repetition Rate PERC Solar Cell Processing • LIDAR Systems • 3D LIDAR Scanning Systems, Airborne Laser Swath Mapping Systems, Laser Altimetry Systems, Coastal Zone Mapping and Imaging Lidar (CZMIL) Systems, Bathymetry LIDAR Systems, Cryosphere Measurements, Laser Triangulation Systems • Laser Induced Breakdown Spectroscopy (LIBS), Mass Spectroscopy Systems • Laser-Capture Microdissection (LCM), Laser-Induced Forward Transfer (LIFT), DNA/RNA/Protein Analysis Methods • Sample Preparation for Microstructure Diagnostics/Failure Analysis	• Uniquely designed ns/ps DPSS laser Unique in the market for sub-ns needs Specifiable pulse width from ~300 ps to 5 ns • High power and high pulse energy Up to 100 W IR Up to 10 W IR air-cooled • High repetition rates Up to 8 MHz • Very low power consumption for air-cooled models ~120 W • Exceptionally low timing jitter < 500 ps • Exceptional and Versatile Pulse Control: PEC (Power or Pulse Energy Control) Burst Mode for individually controllable bursts of up to 2 pulses with a variable separation of 20-30 ns POD (Pulse-On-Demand) pulse bursts can be triggered internally, externally, or continuously, while maintaining constant pulse energy

Specifications – **SN Series Subnanosecond Lasers**, IR Models

IR Models	SN-1064-10	SN-1064-30	SN-1064-70	SN-1064-100
Beam and output specifications				
Wavelength	1064 nm			
Average power[1]	10 W at 1 MHz	30 W at 1 MHz	70 W at 1 MHz	100 W at 1 MHz
Pulse width[2]	~500 ps to 5 ns			
Pulse repetition rate[3]	Single shot to 2 MHz (option up to 8 MHz)			
Pulse-to-pulse stability[4]	< 2% rms			
Long term power stability[5]	≤ 1% rms			
Beam diameter, at exit	~2 mm			
Beam spatial mode	TEM_{00} M^2 < 1.3			
Beam roundness	≥ 90%			
Beam divergence	< 3 mrad			
Beam pointing stability	< 20 µrad	< 50 µrad		
Beam bore sight accuracy	≤ 1 mm lateral (to specified exit location), ≤ 5 mrad angular (to specified exit direction)			
Operational specifications and system characteristics				
Interface	RS232, Ethernet, Software GUI, External TTL Triggering			
Warm-up time	< 20 minutes			
Electrical requirement	100-240 V AC; or 32 V DC, 15 A			
Line frequency	50-60 Hz			
Climate	Ambient 15°C to 30°C (59°F to 86°F) Operating Range, Relative Humidity 90% Maximum, non-condensing			
Power consumption[6]	~120 W	< 600 W	< 800 W	
Dimensions (LxWxH)[7]	15 x 8.615 x 3.75 in.	21 x 8.5 x 3.75 in.	21 x 10 x 3.75 in.	
Weight	~31 lbs	~58 lbs	~74 lbs	
Vibration	Up to 3g			
Cooling system	Air-cooled	Closed-loop chiller		

1. Average power data is taken at nominal pulse width.
2. Specifiable pulse width.
3. Lower repetition rates, down to single shot, achieved by selecting higher pulse repetition rate pulses with the AOM.
4. Measured at a pulse repetition rate of 1 MHz, and at an ambient temperature of ± 2°C.
5. Measured over 8 hours ± 1°C.
6. Power consumption data does not include the power consumption of a separate chiller unit.
7. SN Series subnanosecond lasers are all-in-one (AIO) and do not require a separate controller or utility module. All connections for operation and control of the laser can be found on the back panel of the AIO laser.

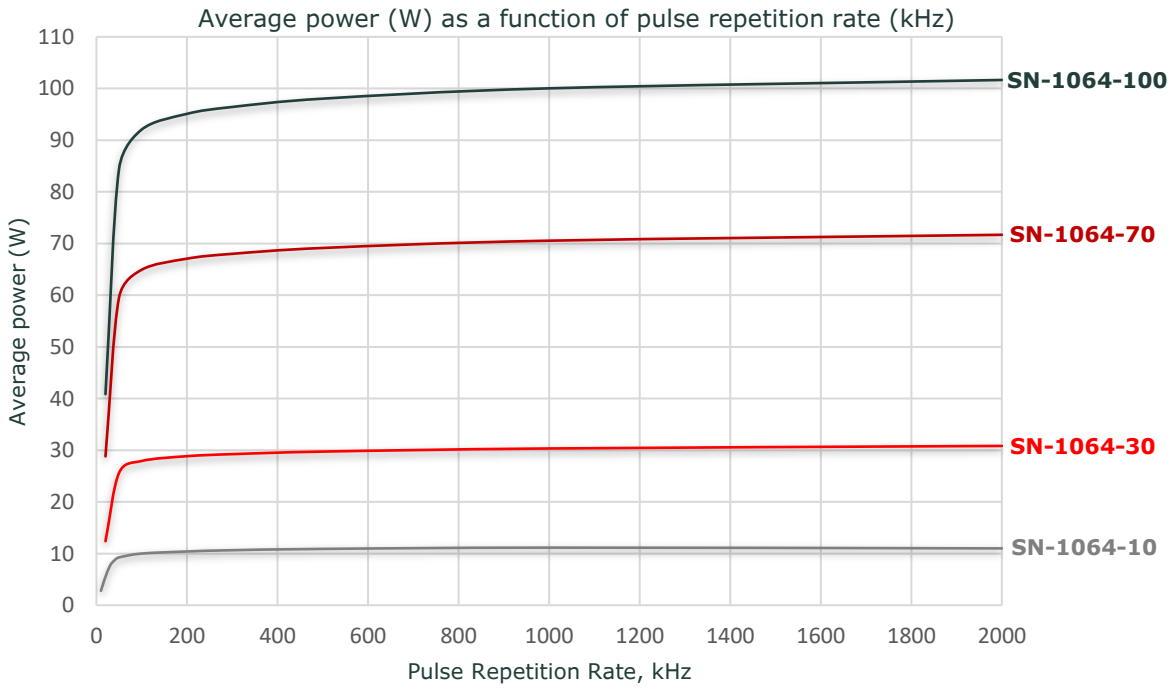

Photonics Industries International, Inc.

Specifications – **SN Series Subnanosecond Lasers**, GRN Models

GRN Models	SN-532-5	SN-532-16	SN-532-40	SN-532-60
Beam and output specifications				
Wavelength	532 nm			
Average power[1]	5 W at 50 kHz 5 W at 100 kHz	16 W at 1 MHz	40 W at 1 MHz	60 W at 1 MHz
Maximum pulse energy[1]	~100 µJ	16 µJ	40 µJ	60 µJ
Pulse width[2]	~350 ps to 5 ns			
Pulse repetition rate[3]	Single shot to 2 MHz (option up to 8 MHz)			
Pulse-to-pulse stability[4]	< 2% rms			
Long term power stability[5]	≤ 1% rms			
Beam diameter, at exit	~1 mm			
Beam spatial mode	TEM_{00} M^2 < 1.3			
Beam roundness	≥ 90%			
Beam divergence	< 3 mrad			
Beam pointing stability	< 20 µrad	< 50 µrad		
Beam bore sight accuracy	≤ 1 mm lateral (to specified exit location), ≤ 5 mrad angular (to specified exit direction)			
Operational specifications and system characteristics				
Interface	RS232, Ethernet, Software GUI, External TTL Triggering			
Warm-up time	< 20 minutes			
Electrical requirement	100-240 V AC; or 32 V DC, 15 A			
Line frequency	50-60 Hz			
Climate	Ambient 15°C to 30°C (59°F to 86°F) Operating Range, Relative Humidity 90% Maximum, non-condensing			
Power consumption[6]	~120 W	< 600 W	< 800 W	
Dimensions (LxWxH)[7]	15 x 8.615 x 3.75 in.	21 x 8.5 x 3.75 in.	21 x 10 x 3.75 in.	
Weight	~31 lbs	~58 lbs	~74 lbs	
Vibration	Up to 3g			
Cooling system	Air-cooled	Closed-loop chiller		

1. Average power data is taken at nominal pulse width.
2. Specifiable pulse width.
3. Lower repetition rates, down to single shot, achieved by selecting higher pulse repetition rate pulses with the AOM.
4. Measured at a pulse repetition rate of 1 MHz, and at an ambient temperature of ± 2°C.
5. Measured over 8 hours ± 1°C.
6. Power consumption data does not include the power consumption of a separate chiller unit.
7. SN Series subnanosecond lasers are all-in-one (AIO) and do not require a separate controller or utility module. All connections for operation and control of the laser can be found on the back panel of the AIO laser.

Specifications – **SN Series Subnanosecond Lasers**, UV Models

UV Models	SN-355-3	SN-355-10	SN-355-25	SN-355-40
Beam and output specifications				
Wavelength	355 nm			
Average power[1]	3 W at 100 kHz	10 W at 1 MHz	25 W at 1 MHz	40 W at 1 MHz
Pulse width[2]	~300 ps to 5 ns			
Pulse repetition rate[3]	Single shot to 2 MHz (option up to 8 MHz)			
Pulse-to-pulse stability[4]	< 2% rms			
Long term power stability[5]	< 2% rms			
Beam spatial mode	TEM_{00} M^2 < 1.3			
Beam roundness	≥ 90%			
Beam divergence	< 3 mrad			
Beam pointing stability	< 50 µrad			
Beam bore sight accuracy	≤ 1 mm lateral (to specified exit location), ≤ 5 mrad angular (to specified exit direction)			
Operational specifications and system characteristics				
Interface	RS232, Ethernet, Software GUI, External TTL Triggering			
Warm-up time	< 20 minutes			
Electrical requirement	100-240 V AC; or 32 V DC, 15 A			
Line frequency	50-60 Hz			
Climate	Ambient 15°C to 30°C (59°F to 86°F) Operating Range, Relative Humidity 90% Maximum, non-condensing			
Power consumption[6]	~120 W	< 600 W	< 800 W	
Dimensions (LxWxH)[7]	15 x 8.615 x 3.75 in.	21 x 8.5 x 3.75 in.	25.5 x 10 x 3.75 in.	
Weight	~31 lbs	~58 lbs	~74 lbs	
Vibration	Up to 3g			
Cooling system	Air-cooled	Closed-loop chiller		

1. Average power data is taken at nominal pulse width.
2. Specifiable pulse width.
3. Lower repetition rates, down to single shot, achieved by selecting higher pulse repetition rate pulses with the AOM.
4. Measured at a pulse repetition rate of 1 MHz, and at an ambient temperature of ± 2°C.
5. Measured over 8 hours ± 1°C.
6. Power consumption data does not include the power consumption of a separate chiller unit.
7. SN Series subnanosecond lasers are all-in-one (AIO) and do not require a separate controller or utility module. All connections for operation and control of the laser can be found on the back panel of the AIO laser.

Features

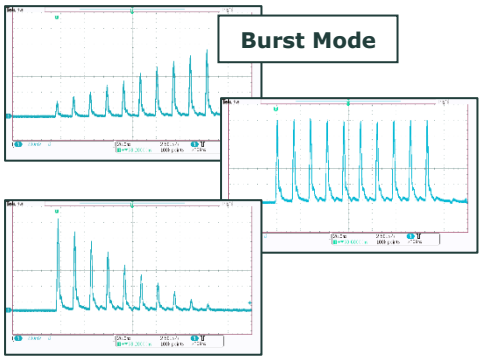

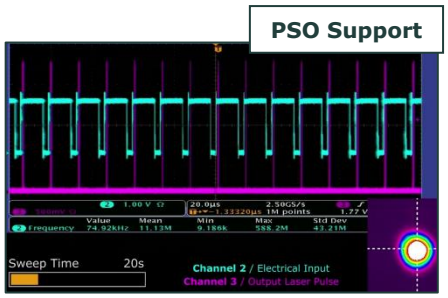

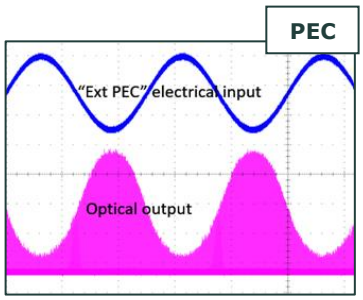

Photonics Industries International, Inc.

Dimensional Drawings

SN-1064-10
SN-532-5
SN-355-3

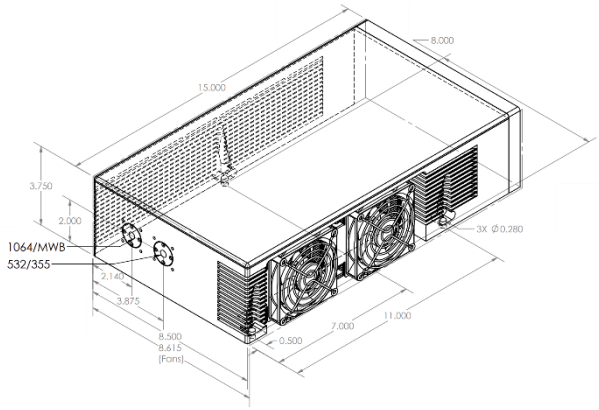

Photonics Industries SN Series subnanosecond lasers are all-in-one (AIO) and do not require a separate controller or utility module. All connections for operation and control of the laser can be found on the back panel of the AIO laser.

SN-1064-30
SN-532-16
SN-355-10

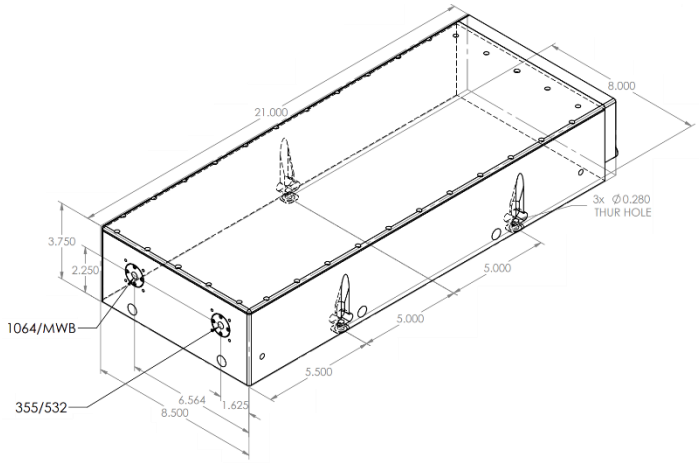

SN-1064-70, & SN-1064-100
SN-532-40, & SN-532-60

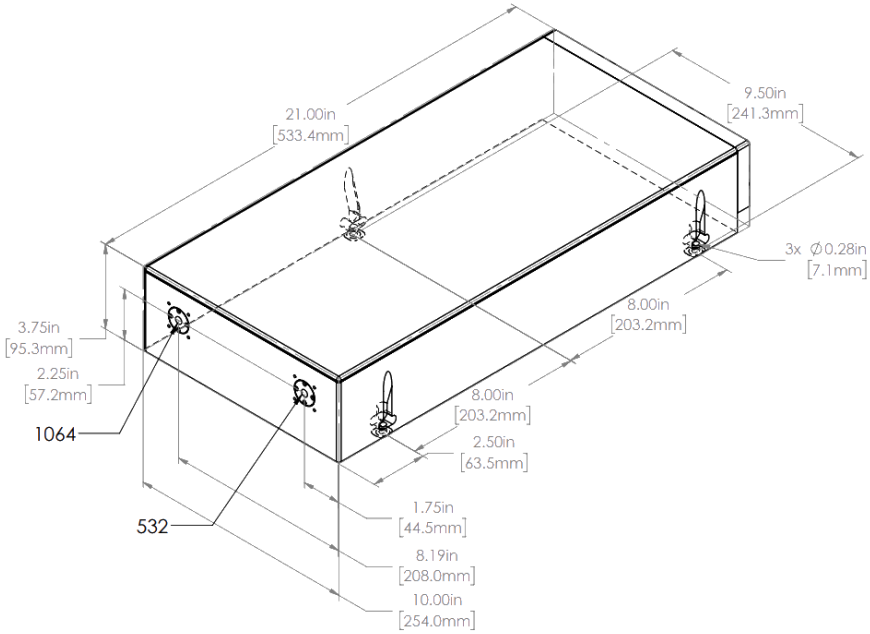

Due to Photonics Industries' commitment to continuous product improvement, specifications and drawings are subject to change without notice.

Photonics Industries conforms to provisions of US 21 CFR 1040.10 & 1040.11 and is made under one or more US patents listed below: 9,531,147, 8,817,831, 7,869,471, 7,346,092, 7,082,149, 7,079,557, 6,999,483, 6,980,574, 6,961,355, 6,842,293, 6,762,405, 6,690,692, 6,587,487, 6,584,134, 6,366,596, 6,356,578, 6,327,281, 6,246,707, 6,229,829, 6,108,356, 6,061,370, 6,028,620, 5,936,983, 5,898,717 and Pending Patents
R.061622

Main Headquarters: 1800 Ocean Ave, Ronkonkoma, New York 11779, United States